FAST MOVING PARTS			
239648	BELT, FHP	298843	GASKET, THERMOSTAT
24306	CAP, PRESSURE	200622	HOSE KIT
36563	CIRCUIT BREAKER 10 AMP 12VDC	200550	MANUAL, OPERATOR
301049	ELEMENT, AIR FILTER	11917	METER, HOUR
299818	EXCHANGER, HEAT	302981	PAINT, ICE BLUE
298854	FILTER, FUEL	42175	PUMP, SEA WATER
299927	FILTER, OIL	301139	SILENCER, INTAKE 2"
298600	GASKET, FRESH WATER PUMP	299798	THERMOSTAT, 160F
302678	GASKET, SEA WATER PUMP MOUNTING		
ITEMS NOT SHOWN			
200501	HARNESS, MARINE M-50B		

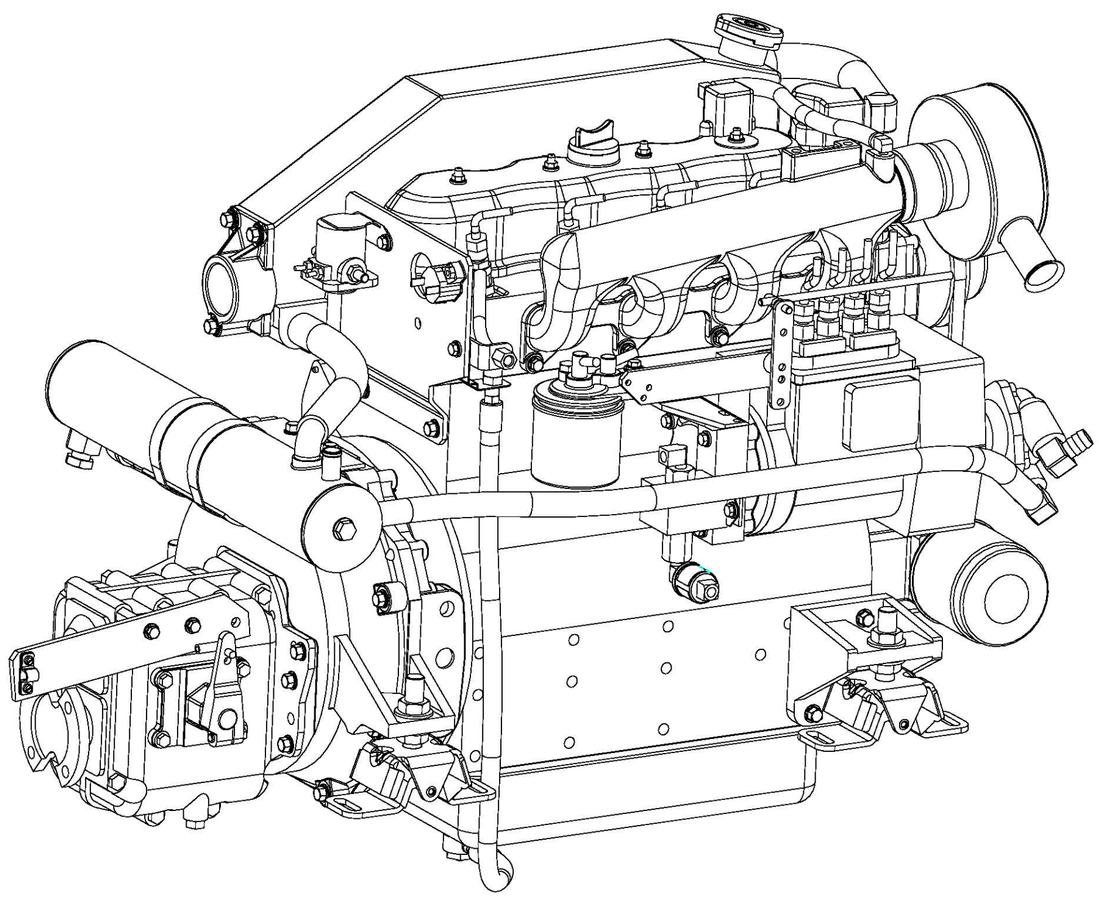

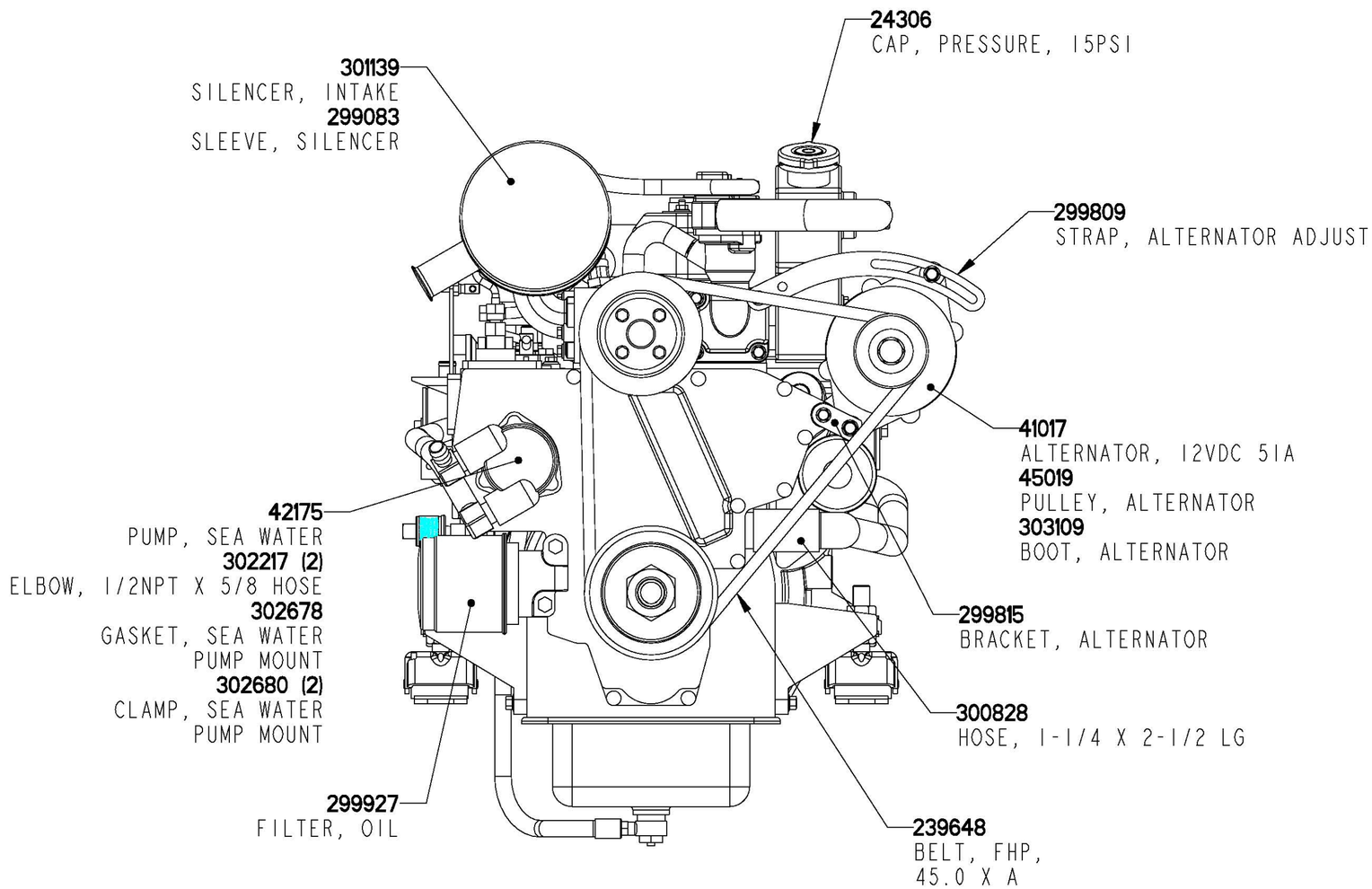
24306
CAP, PRESSURE, 15PSI
301139
SILENCER, INTAKE
299083
SLEEVE, SILENCER
299809
STRAP, ALTERNATOR ADJUST
41017
ALTERNATOR, 12VDC 51A
45019
PULLEY, ALTERNATOR
303109
BOOT, ALTERNATOR
42175
PUMP, SEA WATER
302217 (2)
ELBOW, 1/2NPT X 5/8 HOSE
302678
GASKET, SEA WATER
PUMP MOUNT
302680 (2)
CLAMP, SEA WATER
PUMP MOUNT
299815
BRACKET, ALTERNATOR
300828
HOSE, 1-1/4 X 2-1/2 LG
299927
FILTER, OIL
239648
BELT, FHP,
45.0 X A

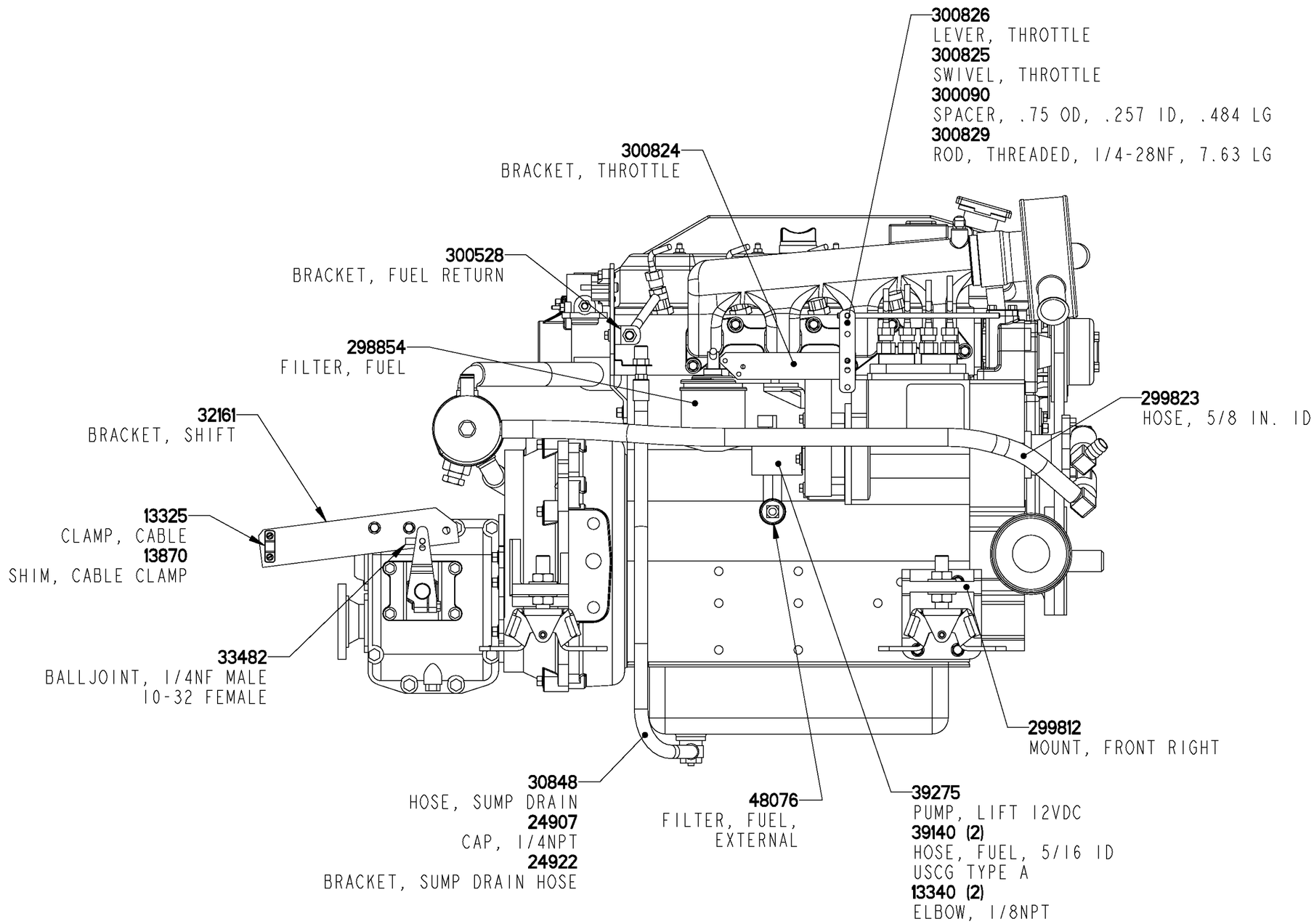
300826
LEVER, THROTTLE
300825
SWIVEL, THROTTLE
300090
SPACER, .75 OD, .257 ID, .484 LG
300829
ROD, THREADED, 1/4-28NF, 7.63 LG
300824
BRACKET, THROTTLE
300528
BRACKET, FUEL RETURN
298854
FILTER, FUEL
32161
BRACKET, SHIFT
13325
CLAMP, CABLE
13870
SHIM, CABLE CLAMP
33482
BALLJOINT, 1/4NF MALE
10-32 FEMALE
299823
HOSE, 5/8 IN. ID
299812
MOUNT, FRONT RIGHT
30848
HOSE, SUMP DRAIN
24907
CAP, 1/4NPT
24922
BRACKET, SUMP DRAIN HOSE
48076
FILTER, FUEL,
EXTERNAL
39275
PUMP, LIFT 12VDC
39140 (2)
HOSE, FUEL, 5/16 ID
USCG TYPE A
13340 (2)
ELBOW, 1/8NPT

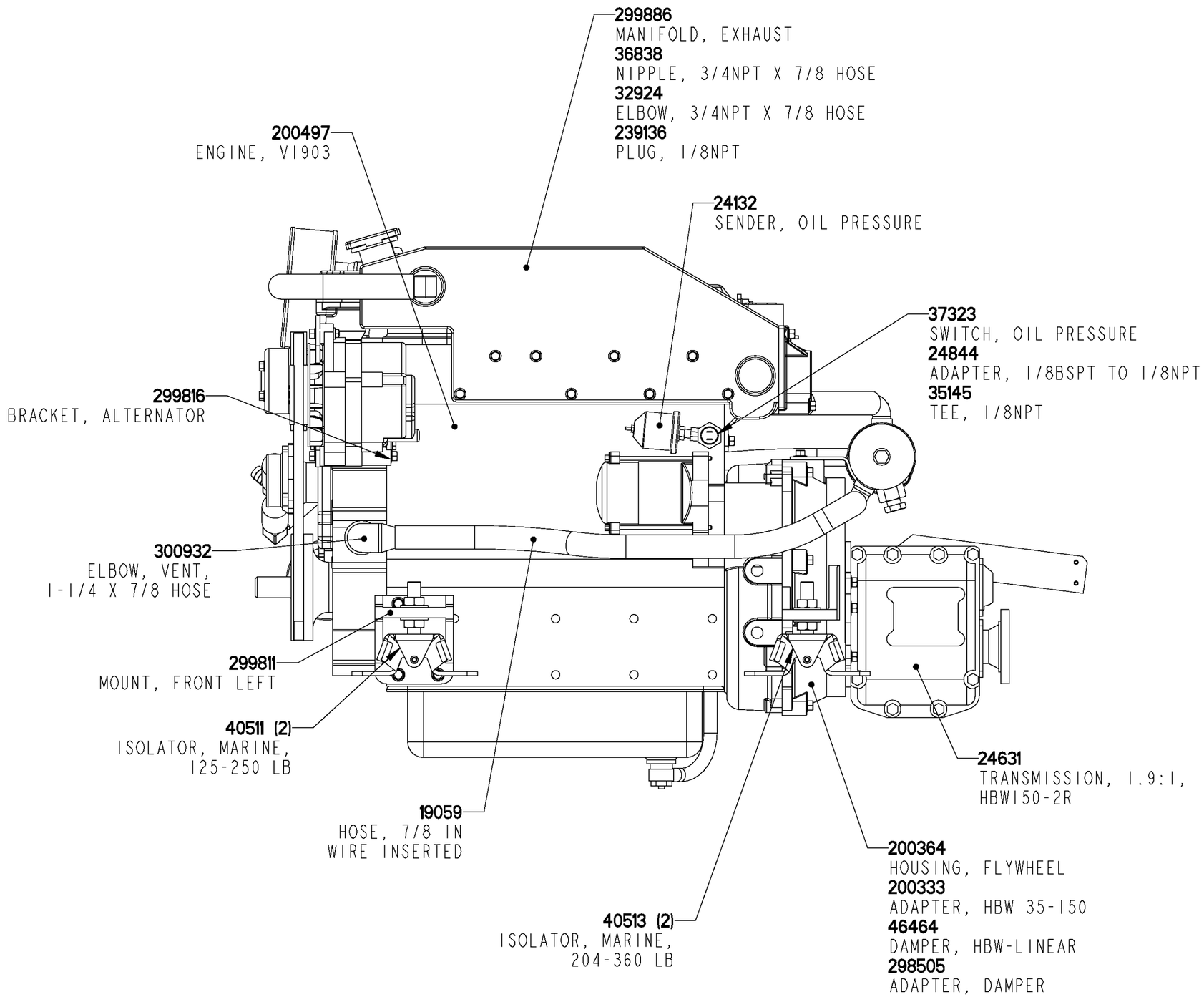
299886
MANIFOLD, EXHAUST
36838
NIPPLE, 3/4NPT X 7/8 HOSE
32924
ELBOW, 3/4NPT X 7/8 HOSE
239136
PLUG, 1/8NPT
200497
ENGINE, V1903
24132
SENDER, OIL PRESSURE
37323
SWITCH, OIL PRESSURE
24844
ADAPTER, 1/8BSPT TO 1/8NPT
35145
TEE, 1/8NPT
299816
BRACKET, ALTERNATOR
300932
ELBOW, VENT,
1-1/4 X 7/8 HOSE
299811
MOUNT, FRONT LEFT
40511 (2)
ISOLATOR, MARINE,
125-250 LB
24631
TRANSMISSION, 1.9:1,
HBW150-2R
19059
HOSE, 7/8 IN
WIRE INSERTED
200364
HOUSING, FLYWHEEL
200333
ADAPTER, HBW 35-150
46464
DAMPER, HBW-LINEAR
298505
ADAPTER, DAMPER
40513 (2)
ISOLATOR, MARINE,
204-360 LB

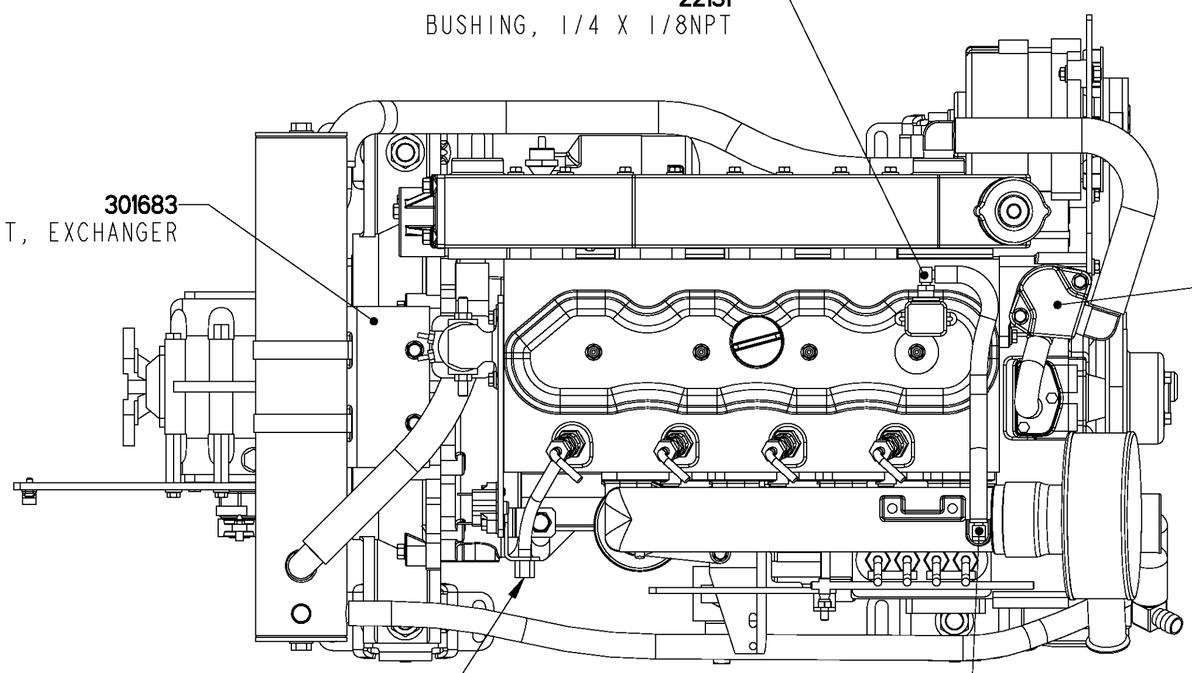
24907
ELBOW, 1/8NPT X 5/16 HOSE
22131
BUSHING, 1/4 X 1/8NPT
301683
BRACKET, EXCHANGER
200263
HOUSING, THERMOSTAT
298843
GASKET, THERMOSTAT HOUSING
299798
THERMOSTAT
32924
ELBOW, 3/4NPT X 7/8 HOSE
13970
PETCOCK, 1/4NPT
30125
SWITCH, TEMPERATURE
299066
SENDER, WATER TEMPERATURE
299829
CONNECTOR, FEMALE
24907
ELBOW, 1/8NPT X 5/16 HOSE

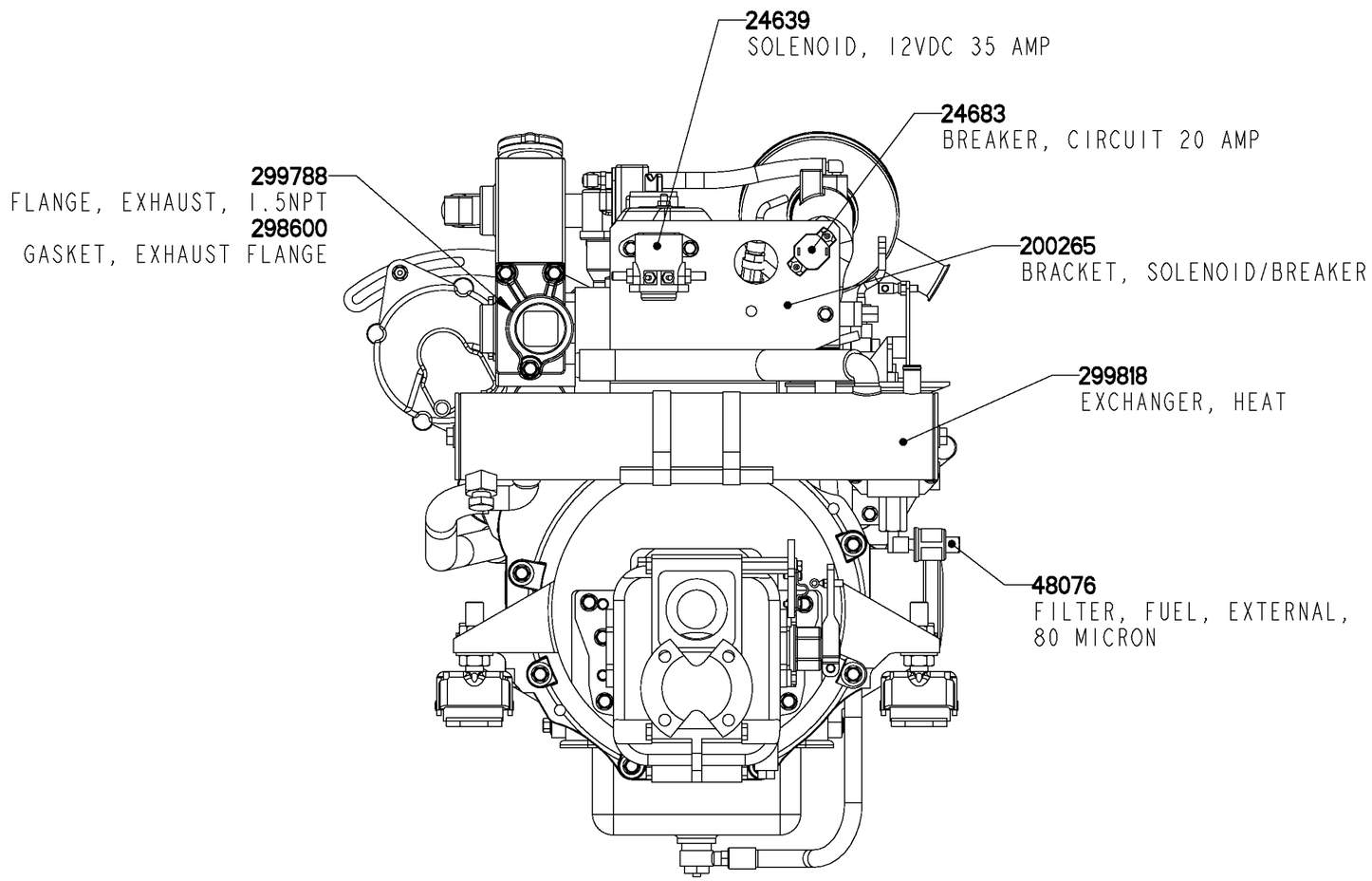
24639
SOLENOID, 12VDC 35 AMP
24683
BREAKER, CIRCUIT 20 AMP
299788
FLANGE, EXHAUST, 1.5NPT
298600
GASKET, EXHAUST FLANGE
200265
BRACKET, SOLENOID/BREAKER
299818
EXCHANGER, HEAT
48076
FILTER, FUEL, EXTERNAL,
80 MICRON